GTK UK LTD.

SPECIFICATION
FOR
TFT MODULE

MODULE No. :IPS156A102A

CUSTOMER APPROVAL:

	SIGNATURE	DATE
PREPARED BY	周明东	2018-03-15
CHECKED BY	李军	2018-03-15
APPROVED BY	Nora Liu	2018-03-15

Notes :

1、Please contact GTK before assigning your product based on this module specification.

2、To improve the quality of product, and this product specification is subject to change without any notice.

REVISION RECORD

Rev No.	Rev date	Contents	Remarks
O	2017-11-30	First release	Preliminary
A	2018-03-15	Update BACKLIGHT CHARACTERISTICS	Page 4

CONTENTS

1. GENERAL INFORMATION..... 4

2. ABSOLUTE MAXIMUM RATINGS..... 4

3. ELECTRICAL CHARACTERISTICS..... 4

4. BACKLIGHT CHARACTERISTICS..... 4

5. EXTERNAL DIMENSIONS..... 5

6. ELECTRO-OPTICAL CHARACTERISTICS..... 6

7. INTERFACE DESCRIPTION..... 8

8. AC CHARACTERISTICS..... 9

9. POWER SEQUENCE..... 10

10. RELIABILITY TEST CONDITIONS..... 11

11. HANDLING PRECAUTIONS..... 12

12. PRECAUTION FOR USE..... 12

13. PACKING SPECIFICATION..... 12

1. GENERAL INFORMATION

No.	Item	Contents	Unit
1	LCD size	15.6 inch (Diagonal)	/
2	LCD type	IPS/Normally black/Transmissive	/
3	Viewing direction(eye)	FREE	/
4	Gray scale inversion direction	/	/
5	Resolution(H*V)	1920*1080 Pixels	/
6	Module size (L*W*H)	360.00*222.23*6.40	mm
7	Active area (L*W)	344.16*193.59	mm
8	Pixel pitch (L*W)	0.17925*0.17925	mm
9	Interface type	eDP	/
10	Module power consumption	TBD	W
11	Back light type	LED	/
12	Driver IC	/	/
13	Weight	TBD	g

2. ABSOLUTE MAXIMUM RATINGS

Item	Symbol	Min.	Max.	Unit
Power supply input voltage(TFT Module)	VDD	-0.3	4	V
Backlight current (normal temp.)	ILED	-	337	mA
Operation temperature	Top	0	+50	°C
Storage temperature	Tst	-20	+60	°C
Humidity	RH	-	90%(Max60 °C)	RH

3. ELECTRICAL CHARACTERISTICS

DC CHARACTERISTICS(at Ta=25°C)

Item	Symbol	Min.	Typ.	Max.	Unit	Note
Power supply input voltage(TFT Module)	VDD	3.0	3.3	3.6	V	
Permissible Input Ripple Voltage	VRF	-	-	100	mV	At VDD = 3.3V
Power supply current	IVDD	-	TBD	-	mA	
Peak-to-peak voltage at TP1	$V_{AUX-DIFF-pp}$	0.32	-	1.36	mV	
AUX DC Common mode Voltage	$V_{AUX-DC-CM}$	0	-	2.0	mV	
AUX CH terminationDCresistor	R_{AUX_TERM}	-	100	-	Ω	Differential input

4. BACKLIGHT CHARACTERISTICS

(at Ta=25°C,RH=60%)

Item	Symbol	Min.	Typ.	Max.	Unit	Note
LED forward voltage	VF	28.0	31.0	33.0	V	IF=45*6mA
LED forward current	IF	-	270	-	mA	
LED power consumption	PLED	-	8.37	-	W	Note1
Number of LED	-		60		PCS	
Connection mode	-	10 in series 6 in parallel			/	
LED life-time	-	20000	50000	-	Hrs	Note2

Note1 : Calculator value for reference : IF*VF = PLED

Note2 : The LED life-time define as the estimated time to 50% degradation of initial brightness at Ta=25°C and IF =270mA. The LED lifetime could be decreased if operating IF is larger than 270mA.

5. EXTERNAL DIMENSIONS

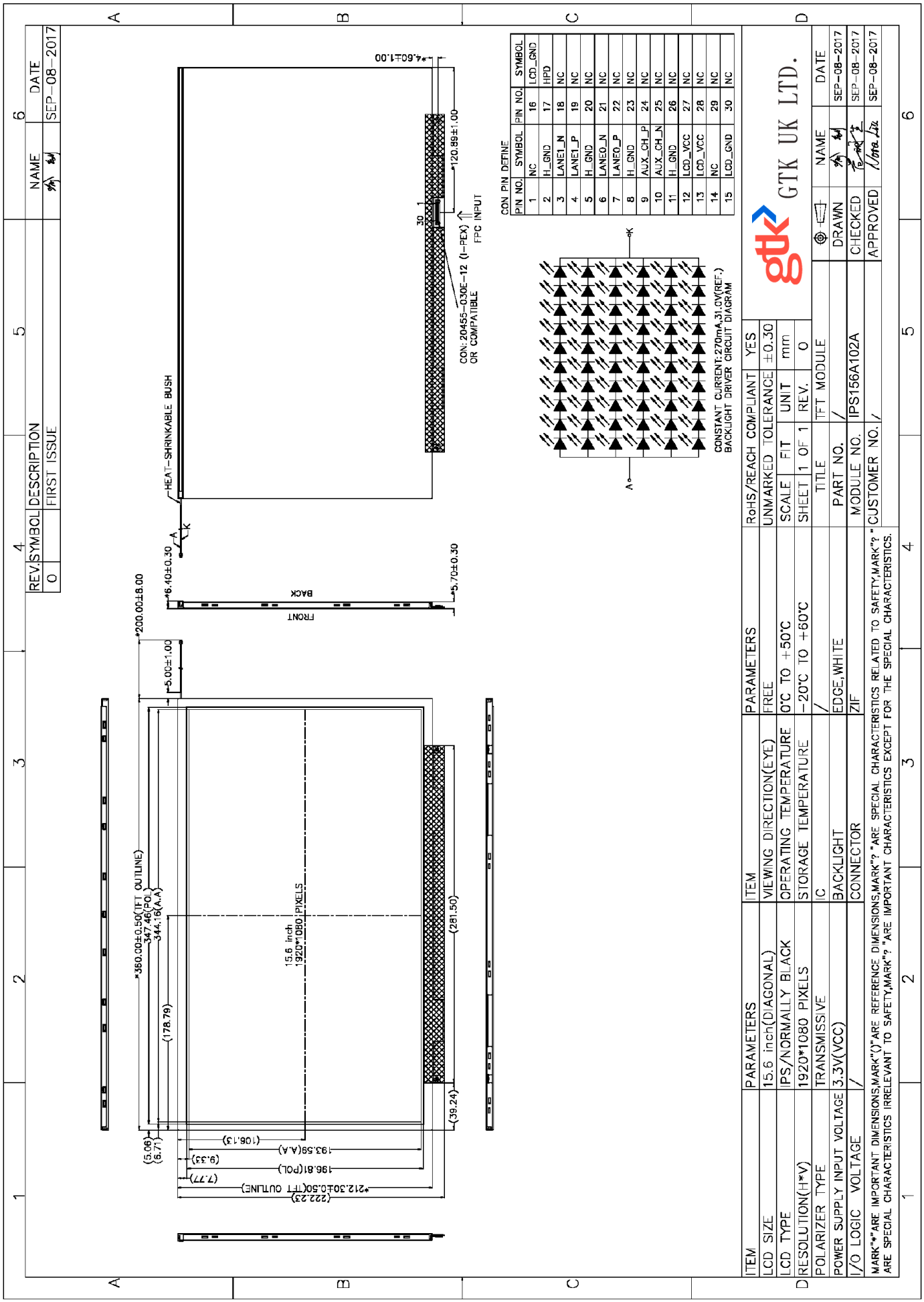

6. ELECTRO-OPTICAL CHARACTERISTICS

Item	Symbol	Condition	Min.	Typ.	Max.	Unit	Remark	Note
Response time	Tr+ Tf	-	-	25	35	ms	FIG.1	Note 4
Contrast ratio	Cr		700	1000	-	-	FIG.2	Note 1
Surface luminance	Lv	θ=0°	-	500	-	cd/m^2	FIG.2	Note 2
Luminance uniformity	Yu	θ=0°	60	65	-	%	FIG.2	Note 3
NTSC	-	θ=0°	-	45	-	%	FIG.2	Note 5
Viewing angle	θ	∅=90°	80	85	-	deg	FIG.3	Note 6
		∅=270°	80	85	-	deg	FIG.3	
		∅=0°	80	85	-	deg	FIG.3	
		∅=180°	80	85	-	deg	FIG.3	
CIE (x,y) chromaticity	Red x	θ=0° ∅=0° Ta=25°C	Typ -0.04	TBD	Typ +0.04	-	FIG.2 CIE1931	Note 5
	Red y			TBD		-		
	Green x			TBD		-		
	Green y			TBD		-		
	Blue x			TBD		-		
	Blue y			TBD		-		
	White x			TBD		-		
	White y			TBD		-		

Note1.Definition of contrast ratio

Contrast ratio(Cr) is defined mathematically by the following formula.
For more information see FIG.2.

$$\text{Contrast ratio} = \frac{\text{Luminance measured when LCD on the “White” state}}{\text{Luminance measured when LCD on the “Black” state}}$$

Measured at the center area of the LCD

Note2.Definition of surface luminance

Surface luminance is the luminance with all pixels displaying white.
For more information see FIG.2.
Lv = Average Surface Luminance with all white pixels(P1,P2,P3, ...,Pn)

Note3.Definition of luminance uniformity

The luminance uniformity in surface luminance is determined by measuring luminance at each test position 1 through n, and then dividing the maximum luminance of n points luminance by minimum luminance of n points luminance.For more information see FIG.2.

$$Yu = \frac{\text{Minimum surface luminance with all white pixels (P1,P2,P3,.....,Pn)}}{\text{Maximum surface luminance with all white pixels (P1,P2,P3,.....,Pn)}}$$

Note4. Definition of response time

The response time is defined as the LCD optical switching time interval between “White” state and “Black”state.Rise time (T_{ON}) is the time between photo detector output intensity changed from 90% to 10%. And fall time (T_{OFF}) is the time between photo detector output intensity changed from 10% to 90%.
For additional information see FIG1.

Note5. Definition of color chromaticity (CIE1931)

CIE (x,y) chromaticity,The x,y value is determined by screen active area center position P5.For more information see FIG.2.

Note6. Definition of viewing angle

Viewing angle is the angle at which the contrast ratio is greater than 10. angles are determined for the horizontal or x axis and the vertical or y axis with respect to the z axis which is normal to the LCD surface.
For more information see FIG.3.
For viewing angle and response time testing, the testing data is base on Autronic-Melchers’s ConoScope or DMS series Instruments or compatible. For contrast ratio, Surface Luminance, Luminance uniformity and CIE,the testing data is base on TOPCON’s BM-5or BM-7 photo detector or compatible.

FIG.1. The definition of response Time

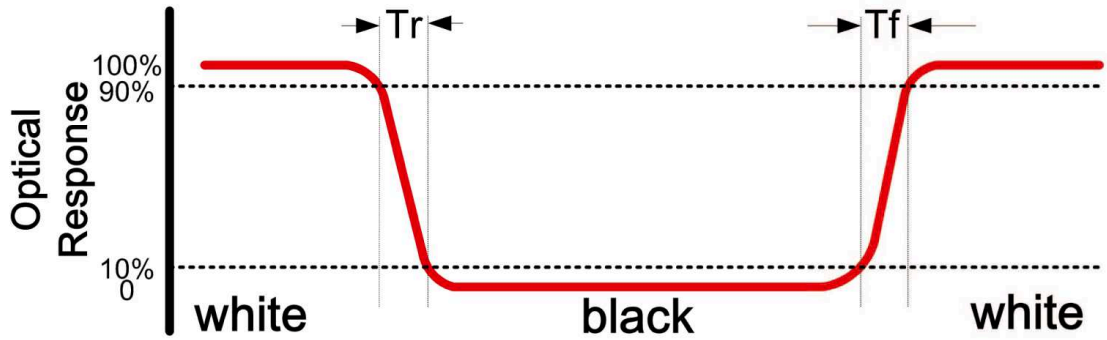

FIG.2. Measuring method for contrast ratio, surface luminance, luminance uniformity, CIE (x,y) chromaticity

Size : S≤5”(see Figure a)
A : 5 mm B : 5 mm
H,V : Active area
Light spot size ∅=5mm(BM-5) or ∅=7.7mm (BM-7)50cm distance or compatible distance from the LCD surface to detector lens.
test spot position : see Figure a.
measurement instrument : TOPCON’s luminance meter BM-5 or BM-7 or compatible (see Figure c).

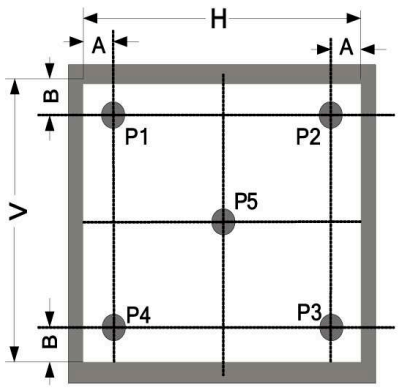

Figure a

Size : 5” < S≤12.3”(see Figure b)
H,V : Active area
Light spot size ∅=5mm(BM-5) or ∅=7.7mm (BM-7)50cm distance or compatible distance from the LCD surface to detector lens.
test spot position : see Figure b.
measurement instrument : TOPCON’s luminance meter BM-5 or BM-7 or compatible (see Figure c).

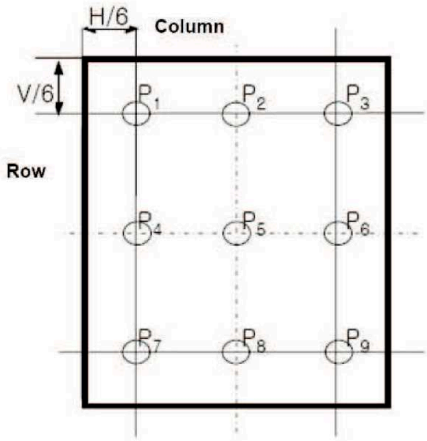

Figure b

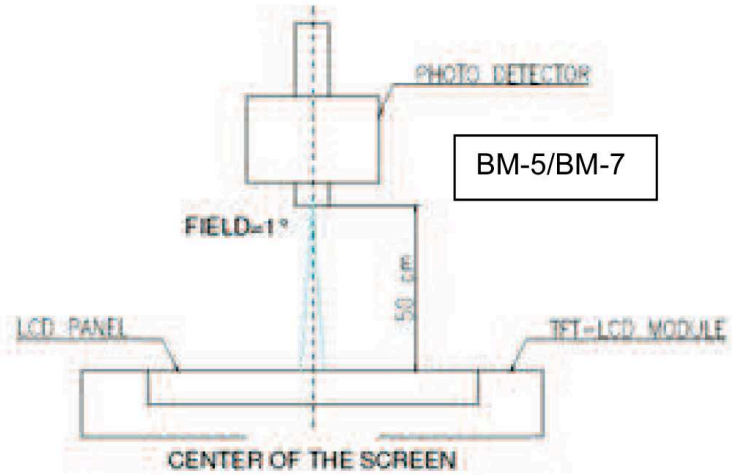

Figure c

FIG.3. The definition of viewing angle

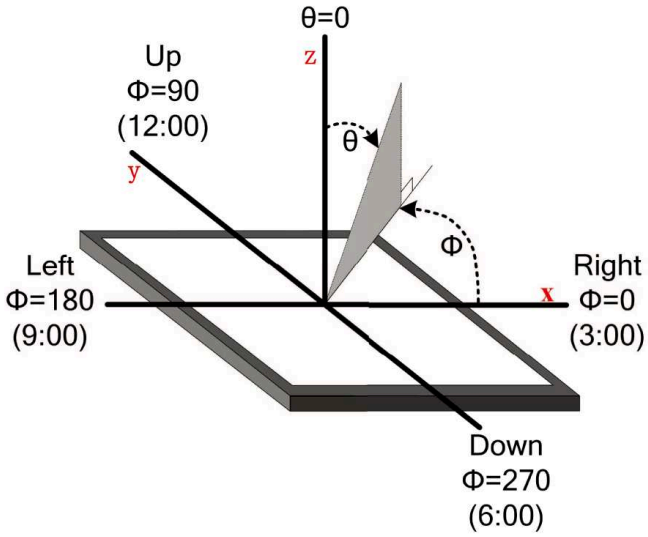

7. INTERFACE DESCRIPTION

TFT Module Interface description

Interface No.	Name	I/O or connect to	Description
1	NC	/	Don't input any signals or any powers into a NC pin.
2	H_GND	P	High Speed Ground
3	Lane1_N	I	Complement Signal Link Lane 1
4	Lane1_P	I	True Signal Link Lane 1
5	H_GND	P	High Speed Ground
6	Lane0_N	I	Complement Signal Link Lane 0
7	Lane0_P	I	True Signal Link Lane 0
8	H_GND	P	High Speed Ground
9	AUX_CH_P	I	True Signal Auxiliary Channel
10	AUX_CH_N	I	Complement Signal Auxiliary Channel
11	H_GND	P	High Speed Ground
12	LCD_VCC	P	LCD logic and driver power(3.3V)
13	LCD_VCC	P	LCD logic and driver power(3.3V)
14	NC	/	Don't input any signals or any powers into a NC pin.
15	LCD_GND	P	LCD logic and driver ground
16	LCD_GND	P	LCD logic and driver ground
17	HPD	O	HPD Signal
18-30	NC	/	Don't input any signals or any powers into a NC pin.

8. AC CHARACTERISTICS

Parameter		Symbol	Min.	Typ.	Max.	Unit	Remark
Clock	Frequency	$1/T_C$	132.0	138.5	140.0	MHz	
Data enable signal	Horizontal period	TH	2020	2080	2400	clock	
				15.02		μs	
	Horizontal period (High)	THd	-	1920	-	clock	
	Vertical period	TV	1090	1111	1200	line	
			-	16.685	-	ms	
	Vertical period (High)	TVd	-	1080	-	line	

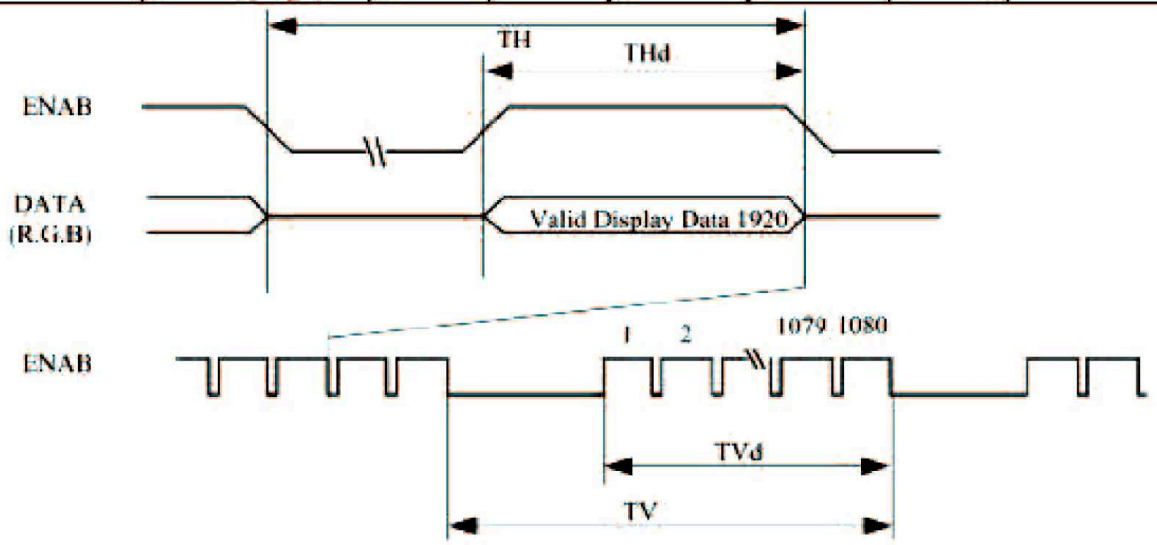

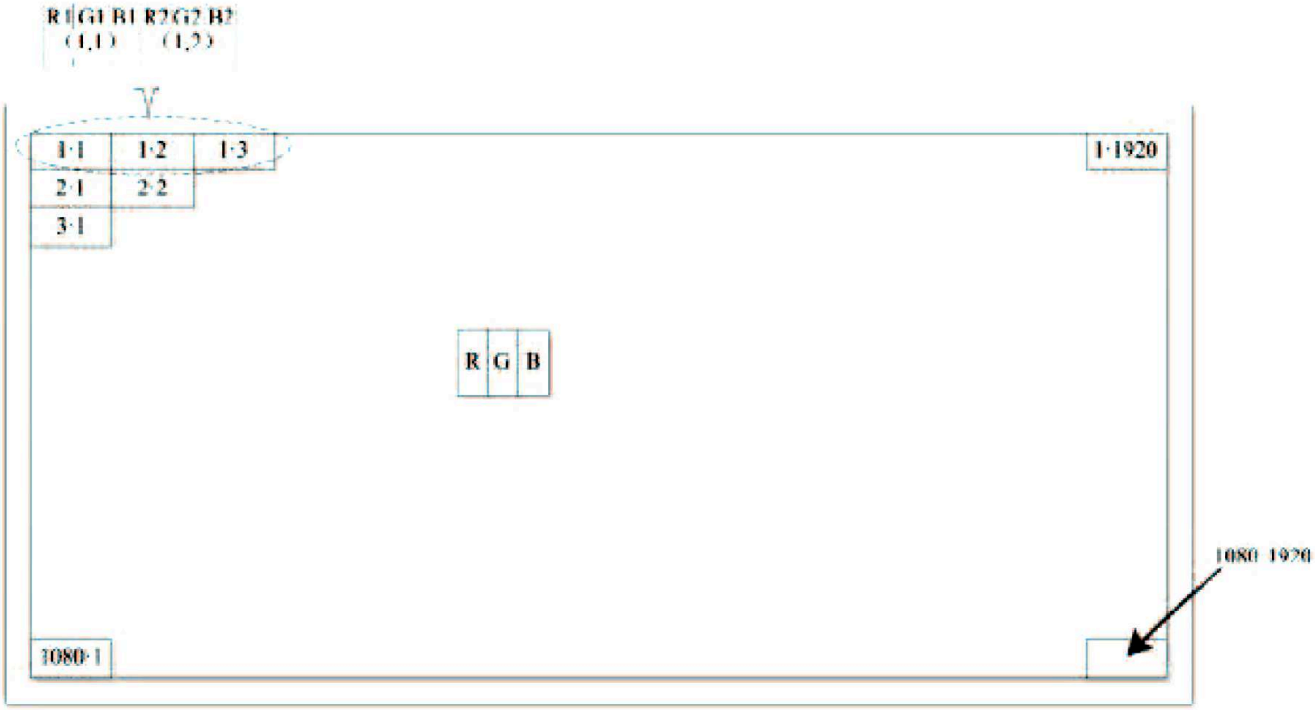

Display position of input data(V·H)

9. POWER SEQUENCE

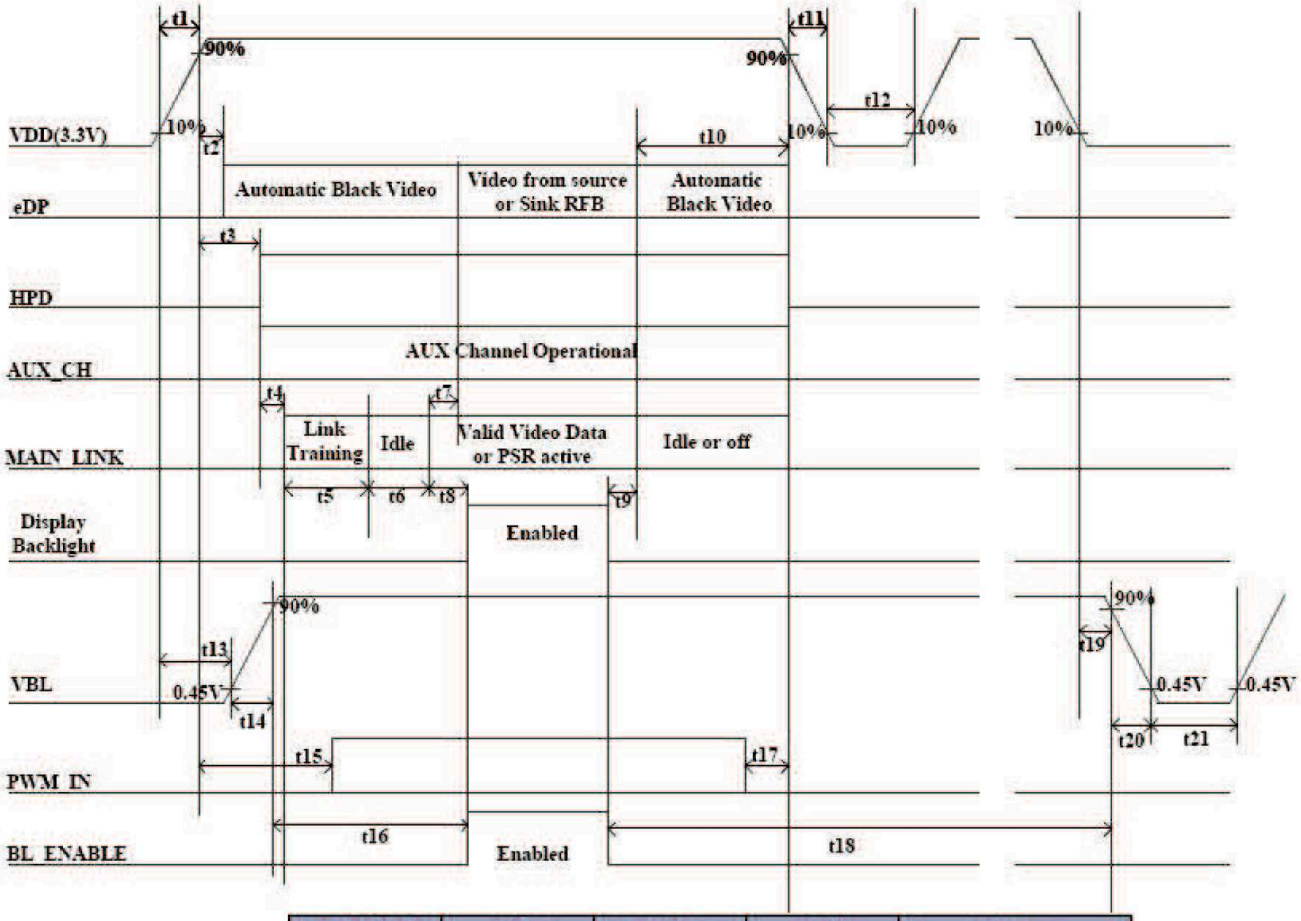

Symbol	Min	Max	Unit	Note
t1	0.5	10	ms	
t2	0	200	ms	
t3	0	100	ms	
t4	-	-	ms	
t5	-	-	ms	
t6	-	-	ms	
t7	0	50	ms	
t8	-	-	ms	
t9	-	-	ms	
t10	0	500	ms	
t11	1	50	ms	[Note 5-2-3]
t12	500	-	ms	
t13	-	-	ms	
t14	0.5	10	ms	
t15	100	-	ms	
t16	0	-	ms	
t17	0	-	ms	
t18	-	-	ms	
t19	-	-	ms	
t20	0.1	-	ms	
t21	100	-	ms	

As for the power off sequence for VDD (t11), be sure to keep above mentioned timing.
If the VDD power off sequence timing is other than shown above, LCD may cause permanent damage.
As for the power sequence for backlight, it is recommended to apply above mentioned input timing.
If the backlight is light on and off at a timing other than shown above displaying image maybe getdisturbed.

10. RELIABILITY TEST CONDITIONS

No.	Test item	Test condition	Inspection after test
10.1	High temperature storage test	+60°C/240 hours	Inspection after 2~4hours storage at room temperature, the sample shall be free from defects : 1.Current changing value before test and after test is 50% larger; 2. Function defect : Non-display,abnormal-display,missing lines, Short lines,ITO corrosion; 3.Visual defect : Air bubble in the LCD,Seal leak,Glass crack.
10.2	Low temperature storage test	-20°C/240 hours	
10.3	High temperature operating test	+50°C/240 hours	
10.4	Low temperature operating test	0°C/240 hours	
10.5	Temperature cycle storage test	-20°C ~ +60°C/10cycles (30min.)	
10.6	High temperature high humidity test	+50°C*80% RH/120 hours	
10.7	Vibration test	Frequency : Random,10~500Hz, Half Sine Amplitude : 1.5Grms Period : X,Y,Z 1 hour	
10.9	ESD test	Air discharge: ±8KV, 10time Contact discharge: ±4KV, 10time	

Remark :
1.The test samples should be applied to only one test item.
2.Sample size for each test item is 3~5pcs.
3.For High temperature high humidity test, Pure water(Resistance>10MΩ) should be used.
4.In case of malfunction defect caused by ESD damage, if it would be recovered to normal state after resetting, it would be judged as a good part.
5.B/L evaluation should be excepted from reliability test with humidity and temperature: Some defects such as black spot/blemish can happen by natural chemical reaction with humidity and Fluorescence B/L has.
6.Failure judgment criterion: Basic specification, Electrical characteristic, Mechanical characteristic, Optical characteristic.

11. HANDLING PRECAUTIONS

(1) Cautions when taking out the module

Pick the pouch only, when taking out module from a shipping package.

(2) Cautions for handling the module

As the electrostatic discharges may break the LCD module, handle the LCD module with care. Peel a protection sheet off from the LCD panel surface as slowly as possible.

As the LCD panel and back - light element are made from fragile glass material, impulse and pressure to the LCD module should be avoided.

As the surface of the polarizer is very soft and easily scratched, use a soft dry cloth without chemicals for cleaning.

Do not pull the interface connector in or out while the LCD module is operating.

Put the module display side down on a flat horizontal plane.

Handle connectors and cables with care.

(3) Cautions for the operation

When the module is operating, do not lose CLK, ENAB signals. If any one of these signals is lost, the LCD panel would be damaged.

Obey the supply voltage sequence. If wrong sequence is applied, the module would be damaged.

(4) Cautions for the atmosphere

Dew drop atmosphere should be avoided.

Do not store and/or operate the LCD module in a high temperature and/or humidity atmosphere. Storage in an electro-conductive polymer packing pouch and under relatively low temperature atmosphere is recommended.

(5) Cautions for the module characteristics

Do not apply fixed pattern data signal to the LCD module at product aging.

Applying fixed pattern for a long time may cause image sticking.

(6) Other cautions

Do not disassemble and/or re-assemble LCD module.

Do not re-adjust variable resistor or switch etc.

When returning the module for repair or etc., Please pack the module not to be broken. We recommend to use the original shipping packages.

12. PRECAUTION FOR USE

12.1 A limit sample should be provided by the both parties on an occasion when the both parties agreed its necessity. Judgment by a limit sample shall take effect after the limit sample has been established and confirmed by the both parties.

12.2 On the following occasions, the handing of problem should be decided through discussion and agreement between responsible of the both parties.

●.When a question is arisen in this specification.

●.When a new problem is arisen which is not specified in this specifications.

●.When an inspection specifications change or operating condition change in customer is reported to GTK, and some problem is arisen in this specification due to the change.

●.When a new problem is arisen at the customer’s operating set for sample evaluation in the customer site.

13. PACKING SPECIFICATION

Please consult our technical department for detail information.