REV.	NO	ZONE	DESCRIPTION	DATE	DISIGN	APPROVE

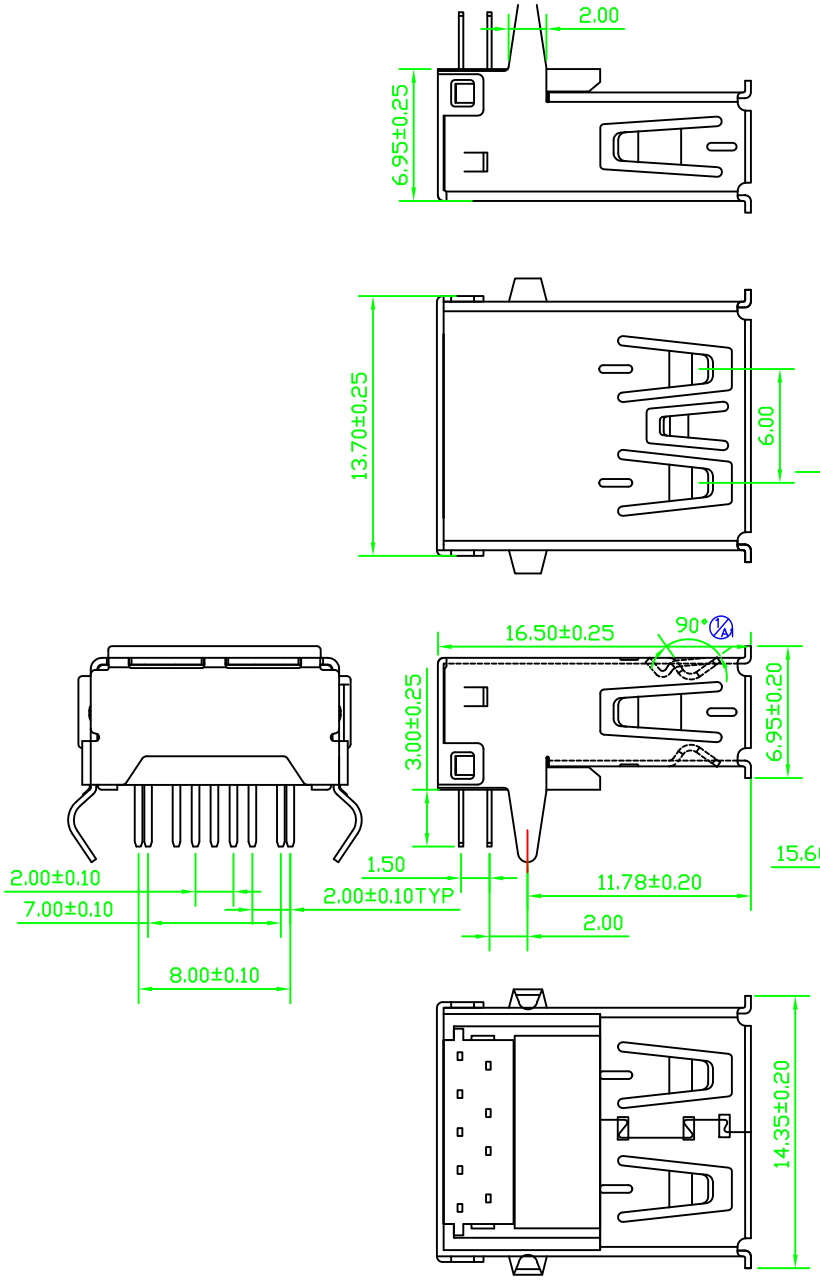

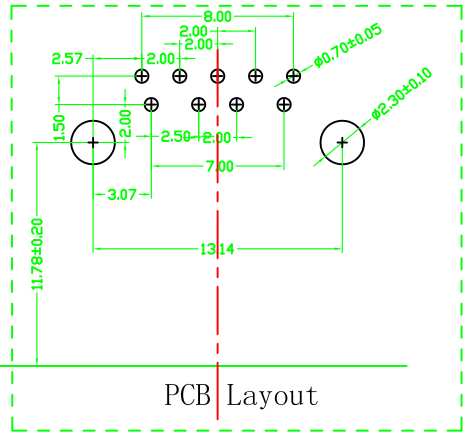

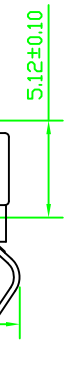

SPECIFCATIONS:
Contact current Rating:
1.8 Amperes for pin1&pin4.
0.25 Amperes other contacts
Dielectric Withstanding Voltage:AC 100V(RMS)
Insulation resistance:100Megohms Minimum.
Contact Resistance:
30mΩ Max for pin1&pin4
50mΩMax for other contacts
Mechanical Characteristics:
Mating Force:35 Newtoms.Maximum
Unmating Force:10 Newtoms.MInimum.
MATERIAL: 8N Min After Durability
Housing: PBT+30%GF 94V-0 COLOR:BLUE
Contact: copper alloy(T=0.25mm)
Shell: Brass
PLATING:
Contact: Au Plated on contact area
Tin Plated on solder area
Nickel underplating over all
Shell: Nickel Plated
operating Temperature:-55°to+85°

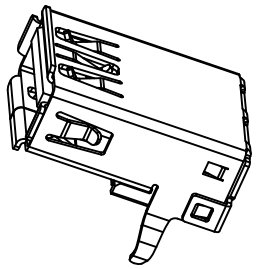

Part number	Contact plating
USBS-AT1E-3G0-R	gold flash
USBS-AT1E-3G3-R	30u" gold

UNLESS TOLERANCE	
GENERAL	ANGLE
.X ±0.25 .XX ±0.20 .XXX±0.10	±2.00°

DRAW BY:	Wina	2012/2/23
DESIGN BY:		
CHECK BY:		
APPROVE BY:		
SCALE	SHEET	UNIT
1:1	1/1	mm

GTK UK Ltd

PART NO: USBS-AT1E-3Gx-R

ITEM : USB 3.0 Type A receptacle R/A Through hole

DRW NO: REV:A