MATERIALS:

- HOUSING-PBT POLYESTER UL94V-0
  MIXED GLASS FIBER.
  STANDARD COLOR-BLACK.
- CONTACTS-0.35mm THICK PHOS-BRONZE PLATED
  WITH HARD GOLD AND GOLD FLASH IN
  SOLDER AREA.
- SHIELD-0.25mm THICK COPPER ALLOY,
  PLATED WITH NICKEL.

CAVITY CONFIRMS TO FCC RULES AND REGULATIONS
PART 68,SUBPART F.

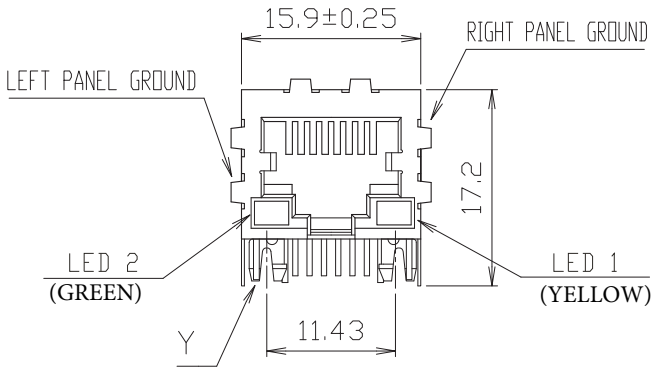

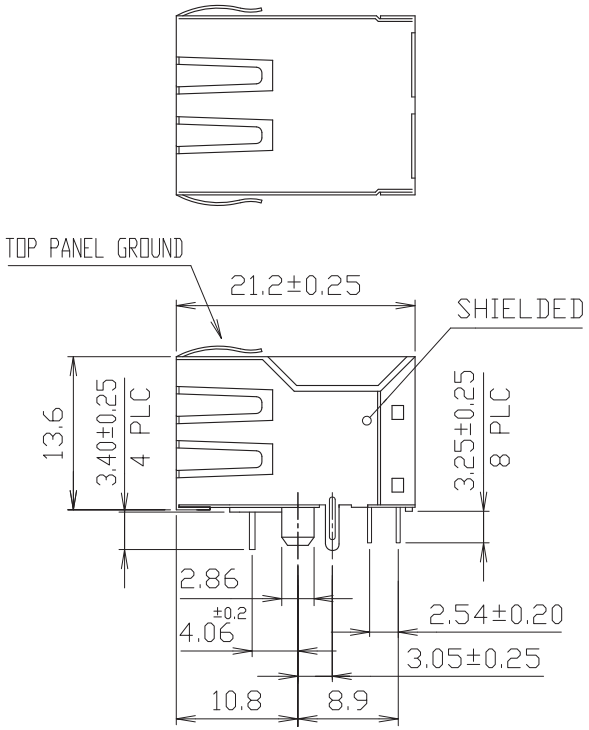

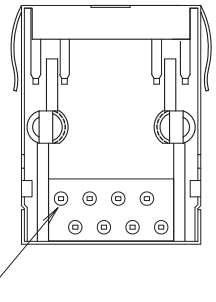

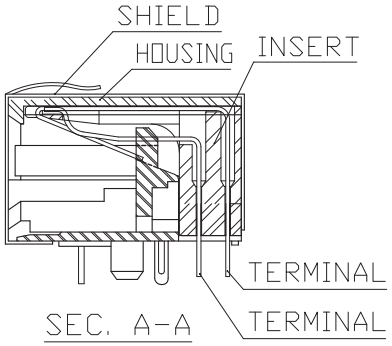

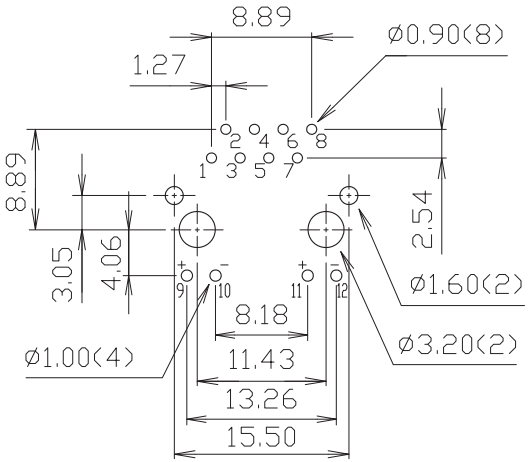

Recommended PCB Layout
(Component Side)

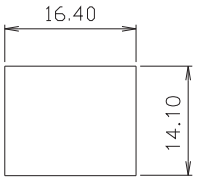

Recommended Panel Cut-out

GTK UK LTD.

TITLE CAT.5, SINGLE PORT, RJ45, SHIELDED, WITH LED'S, ENTRY PCB JACK (RoHS)	All Dimensions in mm	OPEN TOLERANCES Fraction Decimals Angles X ±0.50 X.X ±0.38 X.XX ±0.25 X.XXX ±0.10 ± 1°	DWG. Kate 11/02/10'			
			CKD. Justin 11/02/10'			
PART NO. MTCL-18831SB-D-R REV. B	SCALE 2 : 1	SHEET 1 of 1	APPD. Justin 11/02/10'	B	Update Drawing	11/02/10'
				A	New Release	06/09/09'
REF. NO.	QA. NO.			REV.	DESCRIPTION	DATE